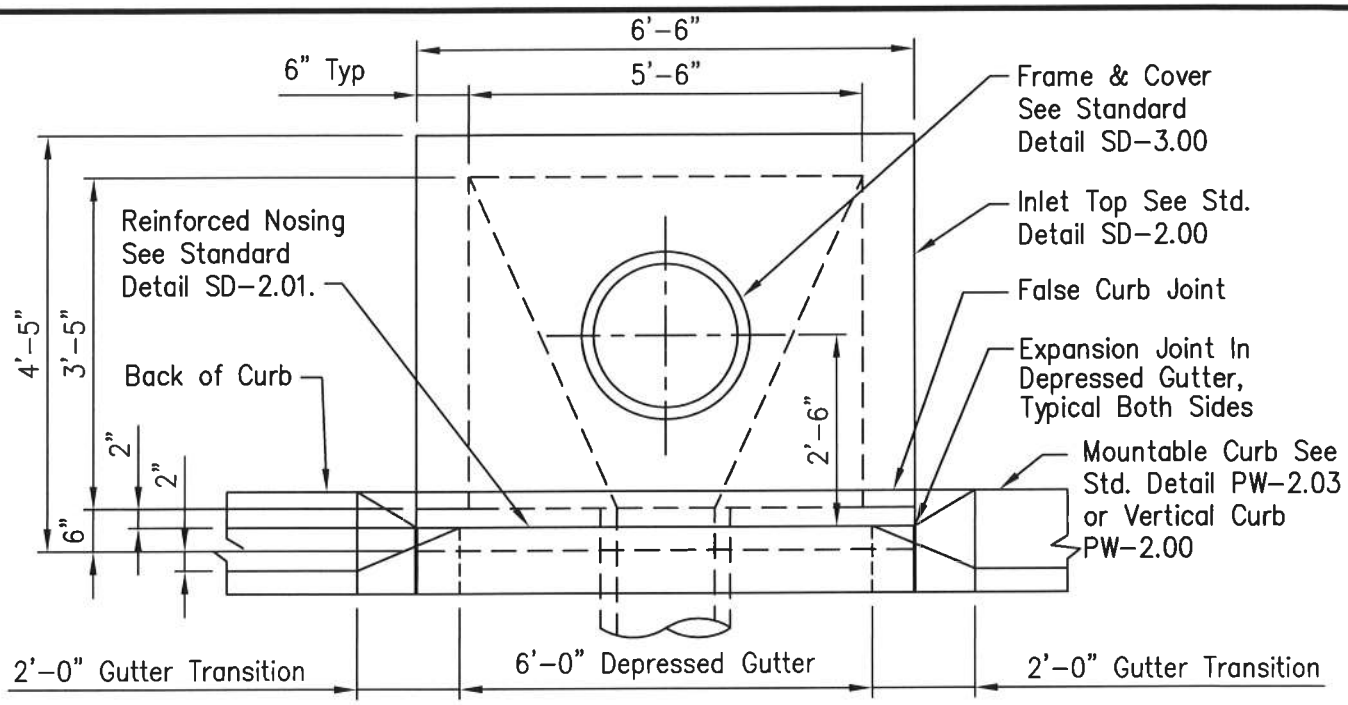

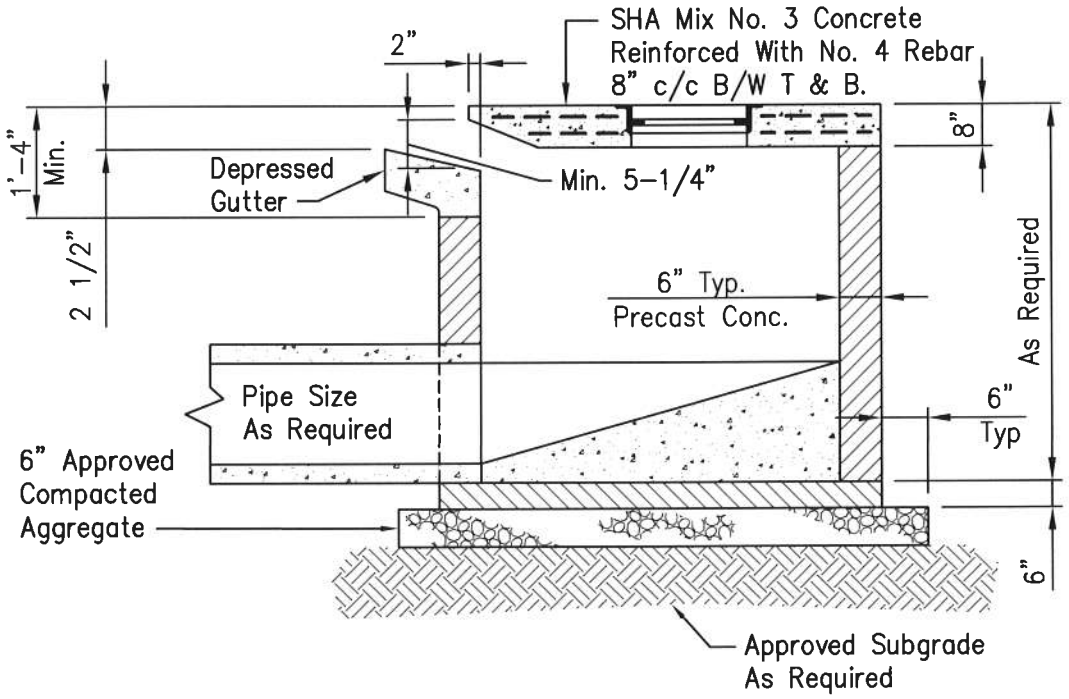

Notes:

1. Provide Lift Hooks In Unexposed Surfaces To Accommodate Field Placement.

APPROVAL	REVISED	TOWN OF EASTON AND EASTON UTILITIES STANDARD DETAILS CURB INLET
TOWN ENGINEER — DATE 4/12/11	OCT 1, 88	
	APR 1, 98	
	JUN 10, 98	
	FEB 1, 06	
	FEB 25, 09	
ISSUED: MAY 1, 1986	JAN 1, 11	STANDARD NO. SD-1.01

Y:\0000\CADD STANDARDS\DETAILS\City Details\Easton MD\DETAILS\SD-1.01.dwg Apr 05 , 2011 - 11:28am, (batn)