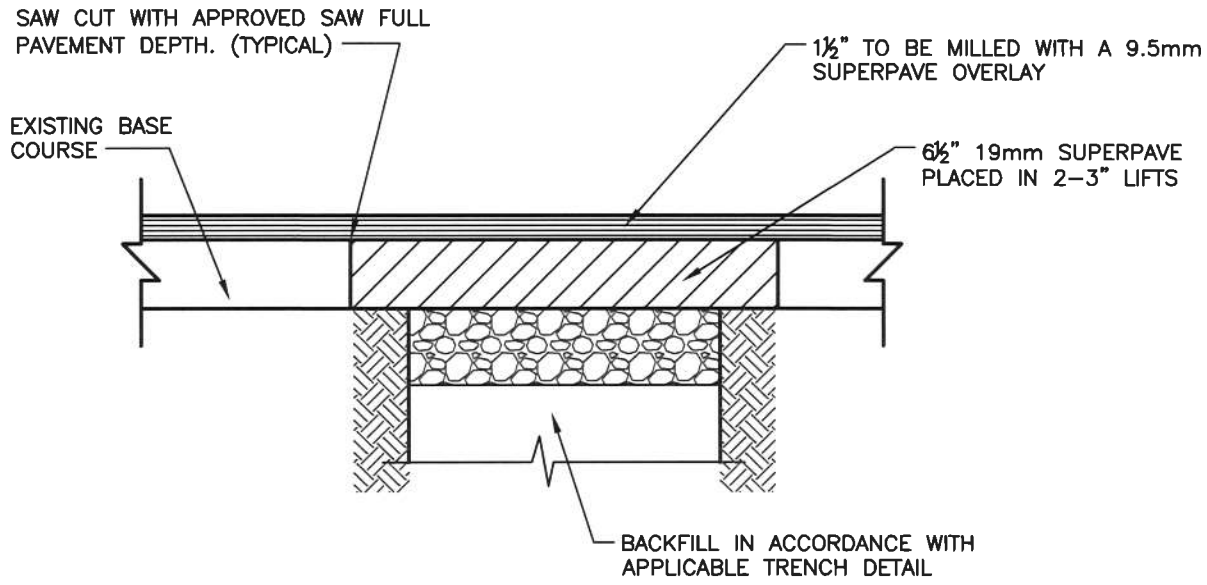

CROSS ROAD PAVEMENT REPAIR

NOTE:

1. SEE DETAIL PW–1.06 FOR TRENCH RESTORATION.
2. SURFACE RESTORATION ON ROAD CROSSINGS SHALL INCLUDE MILL AND OVERLAY 15' ON EITHER SIDE OF THE TRENCH. IF MULTIPLE TENCHES ARE WITHIN 50' OF ONE ANOTHER, MILL AND OVERLAY SHALL INCLUDE THE AREA BETWEEN THE TRENCHES.

APPROVAL

TOWN ENGINEER — DATE 4/12/11

REVISED JAN 1, 11

ISSUED: FEB 25, 2009

TOWN OF EASTON AND EASTON UTILITIES STANDARD DETAILS

PAVEMENT RESTORATION DETAIL #2

STANDARD NO. PW–1.08