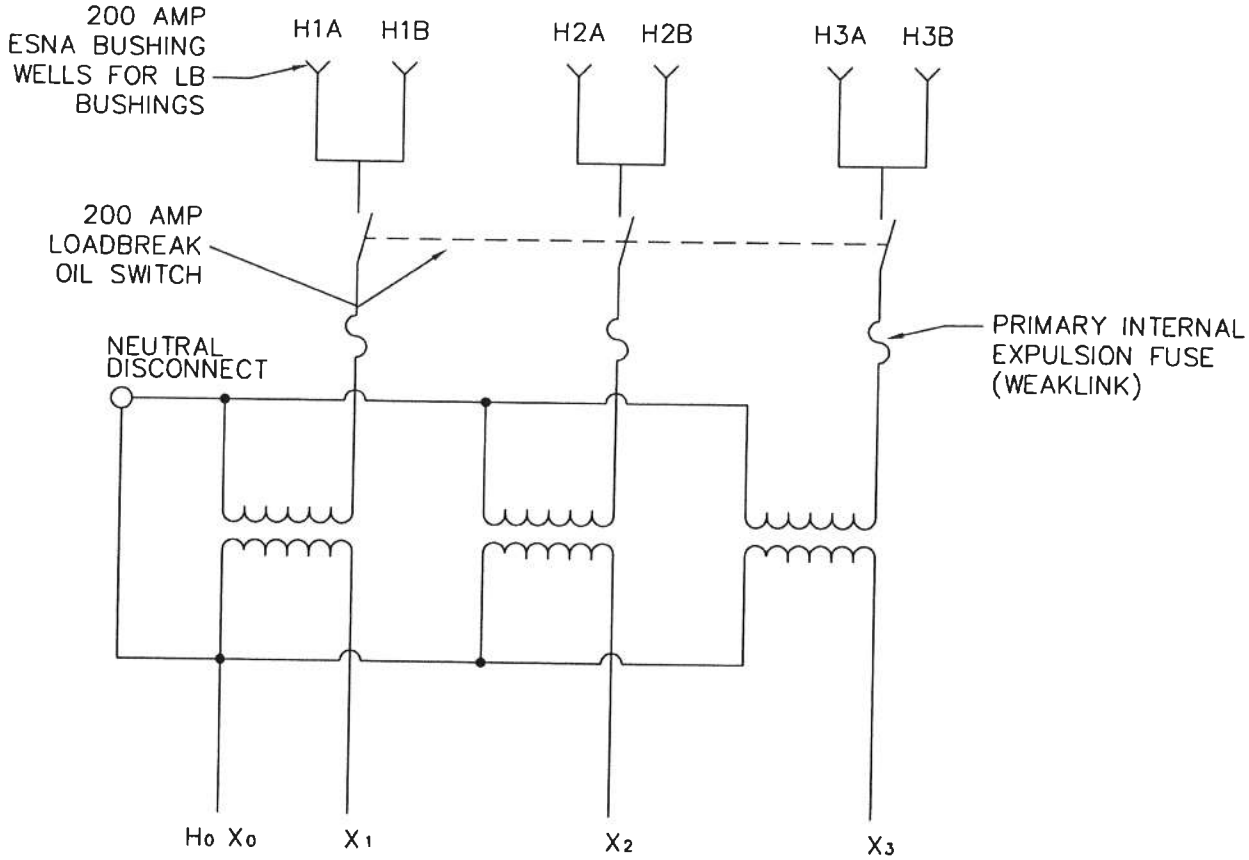

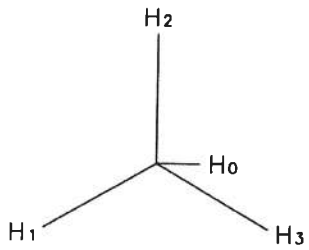

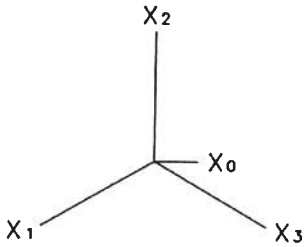

APPROVAL	REVISED	EASTON UTILITIES COMMISSION ELECTRIC DEPARTMENT STANDARD DETAILS THREE PHASE TRANSFORMER PRIMARY CONFIGURATION
Talbot W Bowe 4/25/06 EU MANAGER OF ENGINEERING DATE		
ISSUED		STANDARD No. E-3.02